100.2959 Mod. 95U
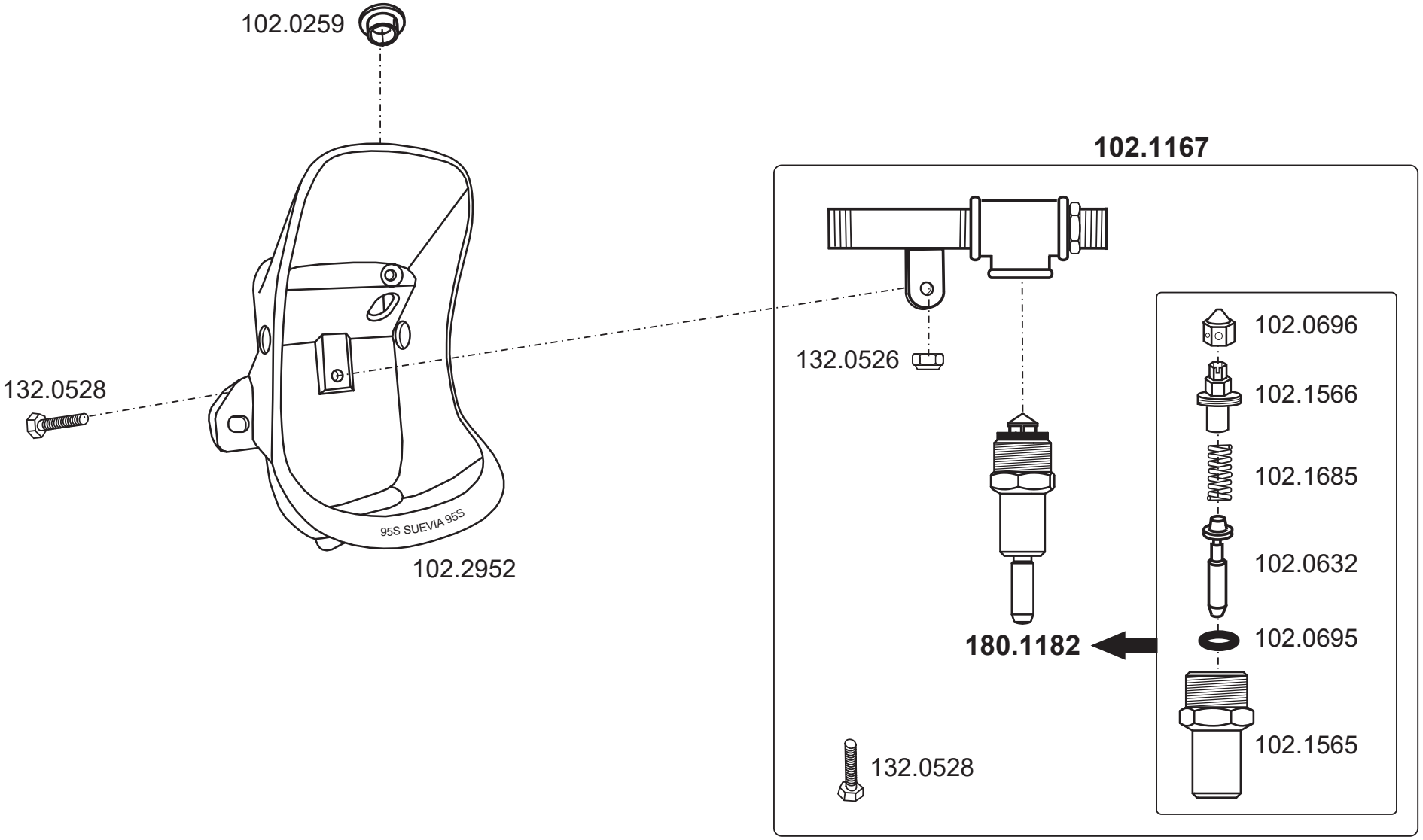
Edelstahl • Stainless Steel • Inox